Table of Contents

1	TITLE, TOC & REV
2	PCA9450B

Revisions

Rev	Description	Date	Approved
X1	Initial Release	6-Nov-20	Allan An
A	Final Release	10-Nov-20	Allan An

PCA9450B-EVK

Default Switch Setting

REF DES	*SWITCH(DEFAULT)*	*PAGE NAME*
S2	OFF	2. PCA9450B
S1	ON	2. PCA9450B

Default Jumper Setting

REF DES	*JUMPER(DEFAULT)*	*PAGE NAME*
J13,J12,J33,J34,J10,J29,J14, J11,J6,J27	1-2	2. PCA9450B
J20	2-3	2. PCA9450B
J30	2-4	2. PCA9450B

6501 William Cannon Drive West
Austin, TX 78735-8598

This document contains information proprietary to NXP and shall not be used for engineering design, procurement or manufacture in whole or in part without the express written permission of NXP Semiconductors.

© NXP SEMICONDUCTORS Classification: Company Internal/Proprietary

Designer: Helen Xu	Drawing Title: PCA9450B-EVK		
Drawn by: Helen Xu	Page Title: TITLE, TOC & REV		
Approved: Allan An	Size C	Document Number SCH-47998 PDF: SPF-47998	Rev A
	Date: Tuesday, November 10, 2020	Sheet 1 of 2	

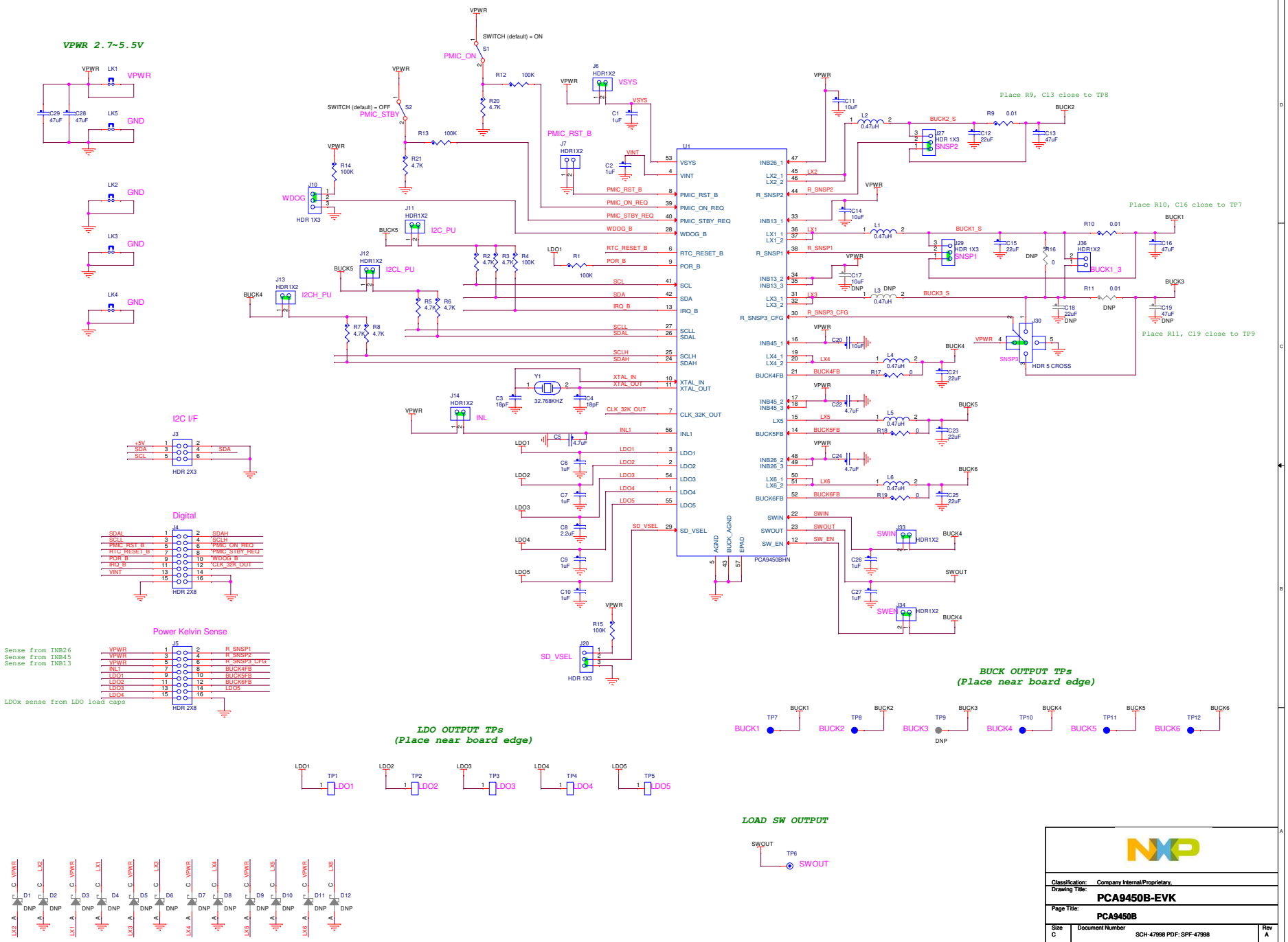
VPWR 2.7~5.5V
VPWR
GND
GND
GND
GND
SWITCH (default) = ON
PMIC_ON
SWITCH (default) = OFF
PMIC_STBY
VSYS
PMIC_RST_B
WDOG
I2C_PU
I2CL_PU
I2CH_PU
INL
SD_VSEL
U1
PCA9450BHN
Place R9, C13 close to TP8
Place R10, C16 close to TP7
Place R11, C19 close to TP9
BUCK1_3
SNSP1
SNSP2
SNSP3
HDR 5 CROSS
I2C I/F
HDR 2X3
Digital
HDR 2X8
Power Kelvin Sense
Sense from INB26
Sense from INB45
Sense from INB13
LDOx sense from LDO load caps
BUCK OUTPUT TPs
(Place near board edge)
LDO OUTPUT TPs
(Place near board edge)
LOAD SW OUTPUT
Classification: Company Internal/Proprietary,
Drawing Title: PCA9450B-EVK
Page Title: PCA9450B
Size C
Document Number SCH-47998 PDF: SPF-47998
Rev A
Date: Tuesday, November 10, 2020
Sheet 2 of 2